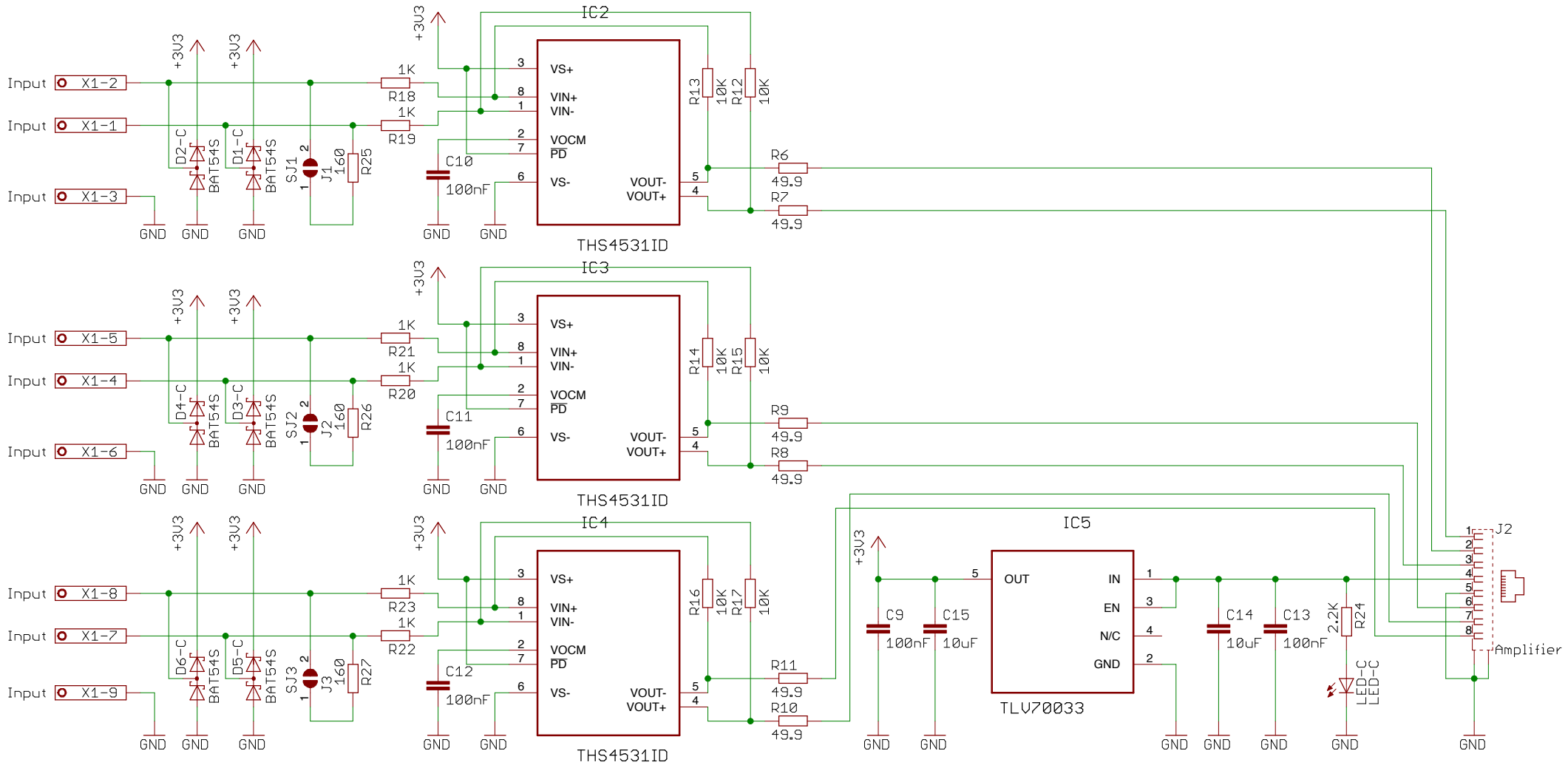
IC2
IC3
IC4
IC5
THS4531ID
THS4531ID
THS4531ID
TLV70033
Input X1-2
Input X1-1
Input X1-3
Input X1-5
Input X1-4
Input X1-6
Input X1-8
Input X1-7
Input X1-9
+3V3
GND
D2-C
D1-C
D4-C
D3-C
D6-C
D5-C
BAT54S
SJ1
SJ2
SJ3
J1
J2
J3
160
R25
R26
R27
1K
R18
R19
R21
R20
R23
R22
C10
C11
C12
100nF
VS+
VIN+
VIN-
VOCM
PD
VS-
VOUT-
VOUT+
R13
R12
R14
R15
R16
R17
10K
R6
R7
R9
R8
R11
R10
49.9
C9
C15
10uF
OUT
IN
EN
N/C
C14
C13
2.2K
R24
LED-C
J2
Amplifier