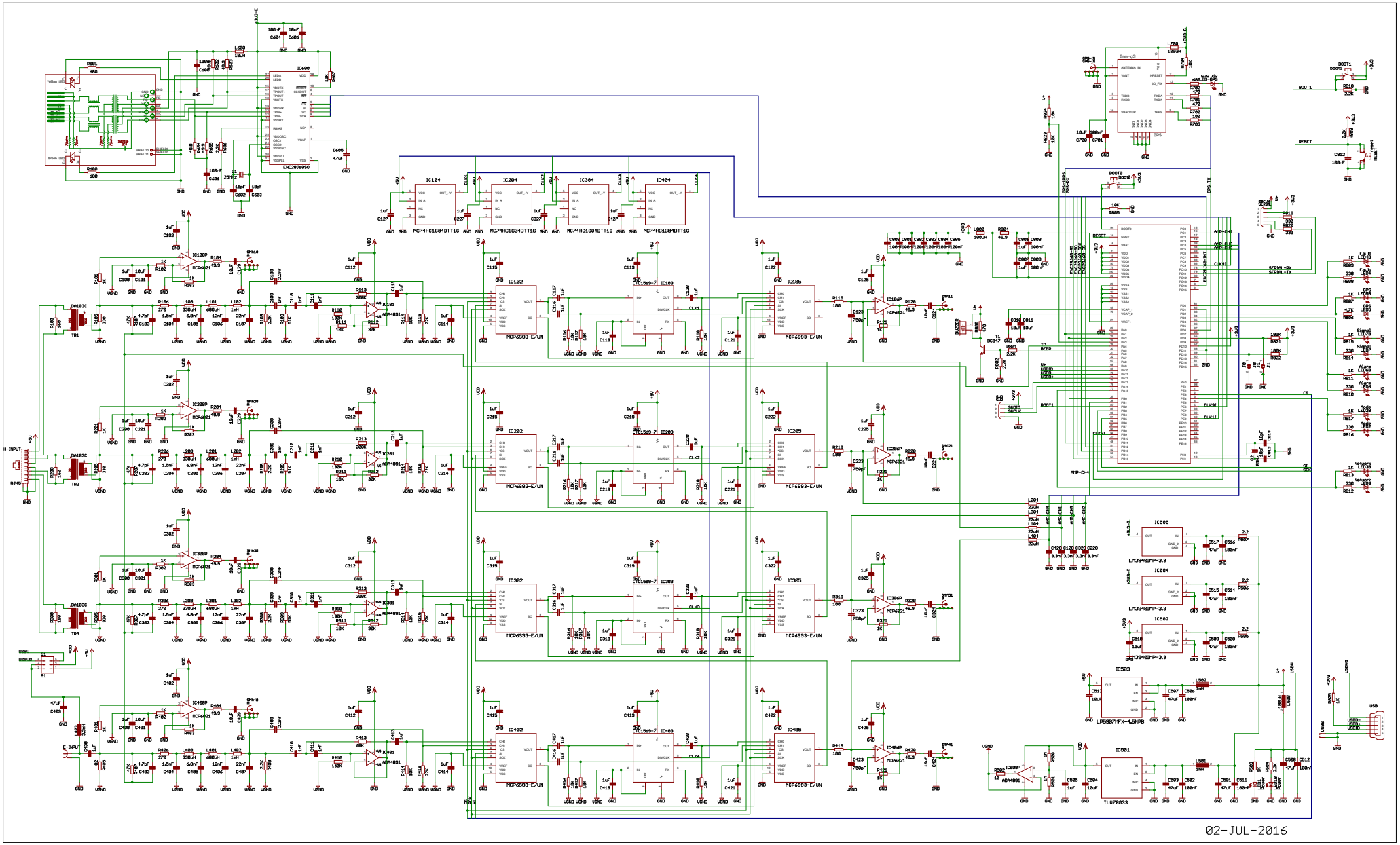
IC600
ENC28J60SO
IC101
IC201
IC301
IC401
MC74HC1G04DTT1G
IC102
IC202
IC302
IC402
MCP6S93-E/UN
IC103
IC203
IC303
IC403
LTC1569-7
IC105
IC205
IC305
IC405
IC106
IC206
IC306
IC406
IC104
IC204
IC304
IC404
MCP6021
IC101
IC201
IC301
IC401
ADA4891
IC500
IC501
TLV70033
IC502
IC503
LP5907MFX-4.5NPB
IC504
LM3940IMP-3.3
IC505
LM3940IMP-3.3
IC506
LM3940IMP-3.3
IC507
Gem-q3
ATMEGA128
TR1
TR2
TR3
DA183C
USB
RESET
BOOT1
SERIAL-RX
SERIAL-TX
AMP-CH1
AMP-CH2
AMP-CH3
AMP-CH4
CLK1
CLK2
CLK3
CLK4
CS
ST
SCK
SDIN
SVCLK
USBDM
USBDP
USBU
USBD
H-INPUT
E-INPUT
02-JUL-2016